REV.	ECR/N NO./DESCRIPTION	DATE	DRAWN	CHECKED	APPROVE
1	N110006	12/08'10	Cary He	Kelvin_Yao	Richard Zhu
2	N110097	04/01'11	Cary He	Kelvin_Yao	Richard Zhu
3	SN12142 正式版本發行	07/02'12	Tracy	Vito	Barney

1. Datum X is the top surface of Product

2. (1) The horizontal axis for the pattern is established by a line through the center of the ⌀1.45 and ⌀0.95 posts.
(2) The vertical axis is 90° to the horizontal axis, through the center of datum Y.

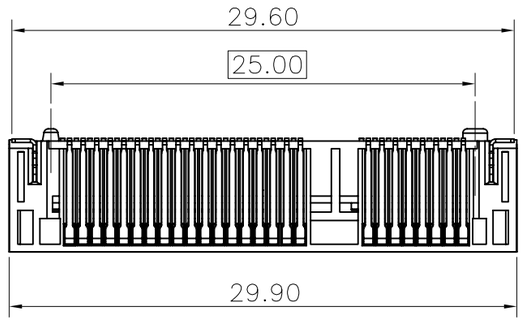

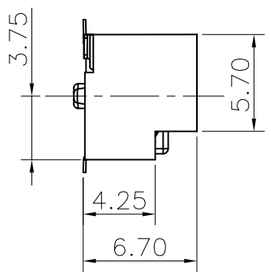

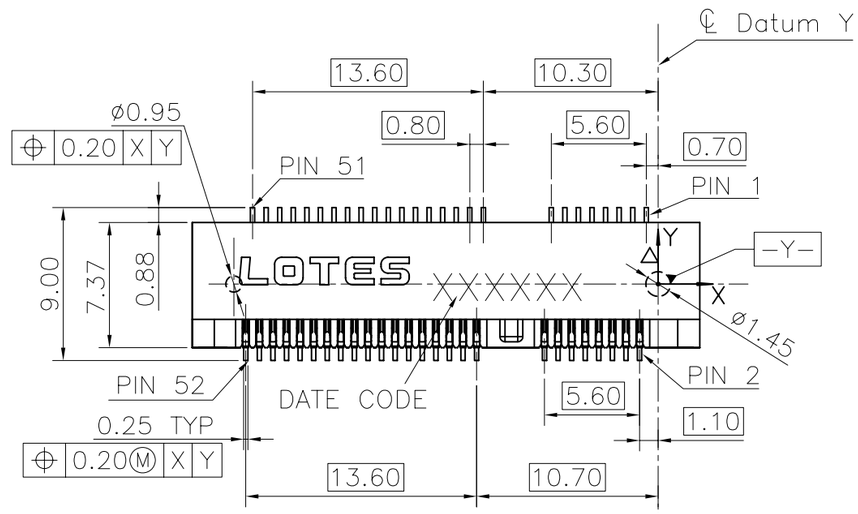

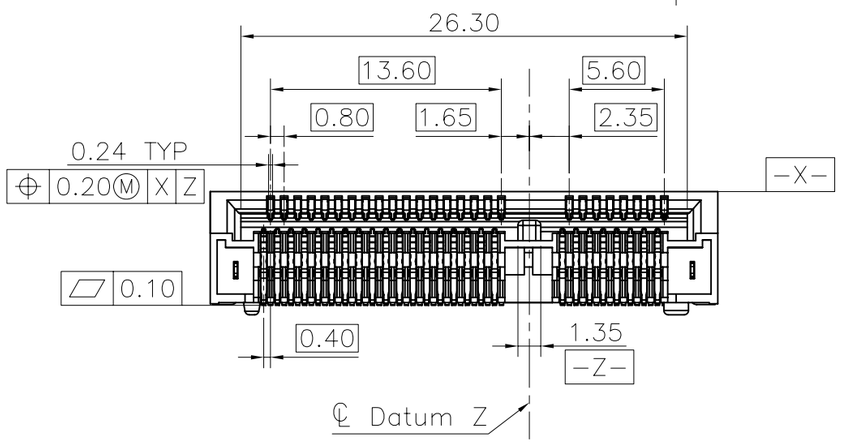

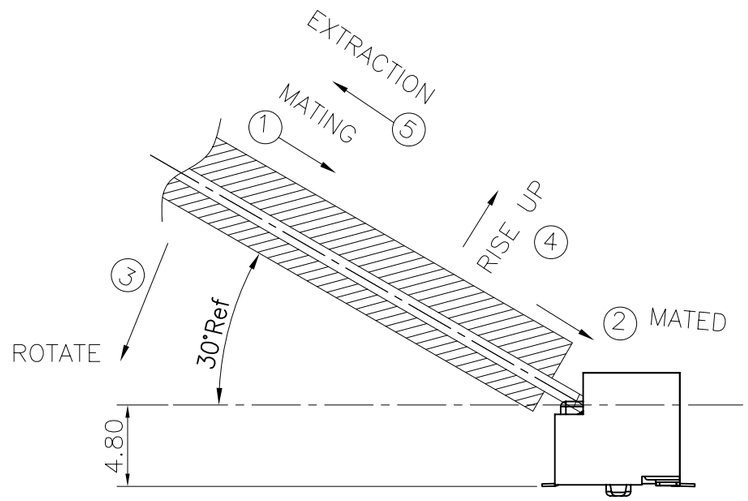

HOW TO MATE AND UNMATE

MATE: ① → ③

UNMATE: ④ → ⑤

TABLE

NO.	PART NO.	COLOR	LOGO	DESCRIPTION
3	AAA-PCI-073-P07	BLACK	✓	BRASS C2680_Au 10u"
2	AAA-PCI-073-P08	BLACK	✓	BRASS C2680_Au 1u" MIN
1	AAA-PCI-073-P09	BLACK	✓	BRASS C2680_Au 30u"

GENERAL TOLERANCES UNLESS SPECIFIED		PART NO. SEE TABLE	LOTES
.X ± 0.35	X.° ± 3°		
.XX ± 0.25	.X° ± 2°	APPROVED BY Barney	TITLE MINI PCI EXPRESS 6.7H 0.8PITCH 52P
.XXX ± 0.15	.XX° ± 1°		
CUSTOMER DRAWING		CHECKED BY Vito	DWG NO. AP-AAA-PCI-073
SIZE A4	UNITS MM	DRAWN BY XU	SHEET 1 / 5 · SCALE 2 : 1 · REV 3

NOTES:

1.MATERIAL:
  1).HOUSING: LCP BLACK UL94V-0.
  2).CONTACT: PHOSPHOR BRONZE OR BRASS (SEE TABLE).
  3).PADS: BRASS .

2.FINISH:
  2.1 CONTACTS:
    1).50u"MIN Ni UNDER PLATED OVER ALL.
    2).Au PLATING ON CONTACT AREA (SEE TABLE).
    3).MATTE-Tin 100u"MIN ON SOLDER AREA.
  2.2 PADS:
    1).60u"MIN Ni UNDER PLATED OVER ALL.
    2).MATTE-Tin 100u"MIN ON SOLDER AREA.

3.MECHANICAL PERFORMANCE,
  MATING & UNMATING FORCE: 2.3 Kgf MAX.

4.ELECTRICAL PERFORMANCE,
  4-1.VOLTAGE RATING: 50 V AC PER CONTACT.
    CURRENT RATING: 0.5 A.
  4-2.LLCR:INITIAL 55mΩ MAX PER CONTACT..
    FINAL 20mΩ MAX
  4-3.INSULATION RESISTANCE:
    500MΩ MIN
  4-4.DIELECRIC WITHSTAND VOLTAGE:
    AC 300V FOR 1 MINUTE BETWEEN ADJACENT CONTACTS.
    NO BREAKDOWN OR FLASH.
    CURRENT LEAKAGE:1mA.

5. IR REFLOW:
  THE PEAK TEMPRATURE ON THE BOARD SHALL BE
  MAINTAINED FOR 10 SECONDS AT 260±5°C.

6. AAA-PCI-073-P** : HF COMPLIANT.

7. DC: XXXXXX
  - DATE
  - WEEK
  - YEAR

8. PRODUCT NO:AAA-PCI-***-***
  - TYPE SERIAL NUMBER
  - K: LEAD FREE/P:HALOGEN FREE
  - PRODUCT SERIAL NUMBER
  - PRODUCT TYPE
  - FINISHED PRODUCT
  - BOARD TO CONNECTOR
  - CONNECTOR

GENERAL TOLERANCES UNLESS SPECIFIED		PART NO. SEE TABLE	LOTES
.X ± 0.35	X.° ± 3°		
.XX ± 0.25	.X° ± 2°	APPROVED BY Barney	TITLE MINI PCI EXPRESS 6.7H 0.8PITCH 52P
.XXX ±0.15	.XX° ±1°		
CUSTOMER DRAWING		CHECKED BY Vito	DWG NO. AP-AAA-PCI-073
SIZE A4	UNITS MM	DRAWN BY XU	SHEET 2 / 5 · SCALE 5 : 2 · REV 3

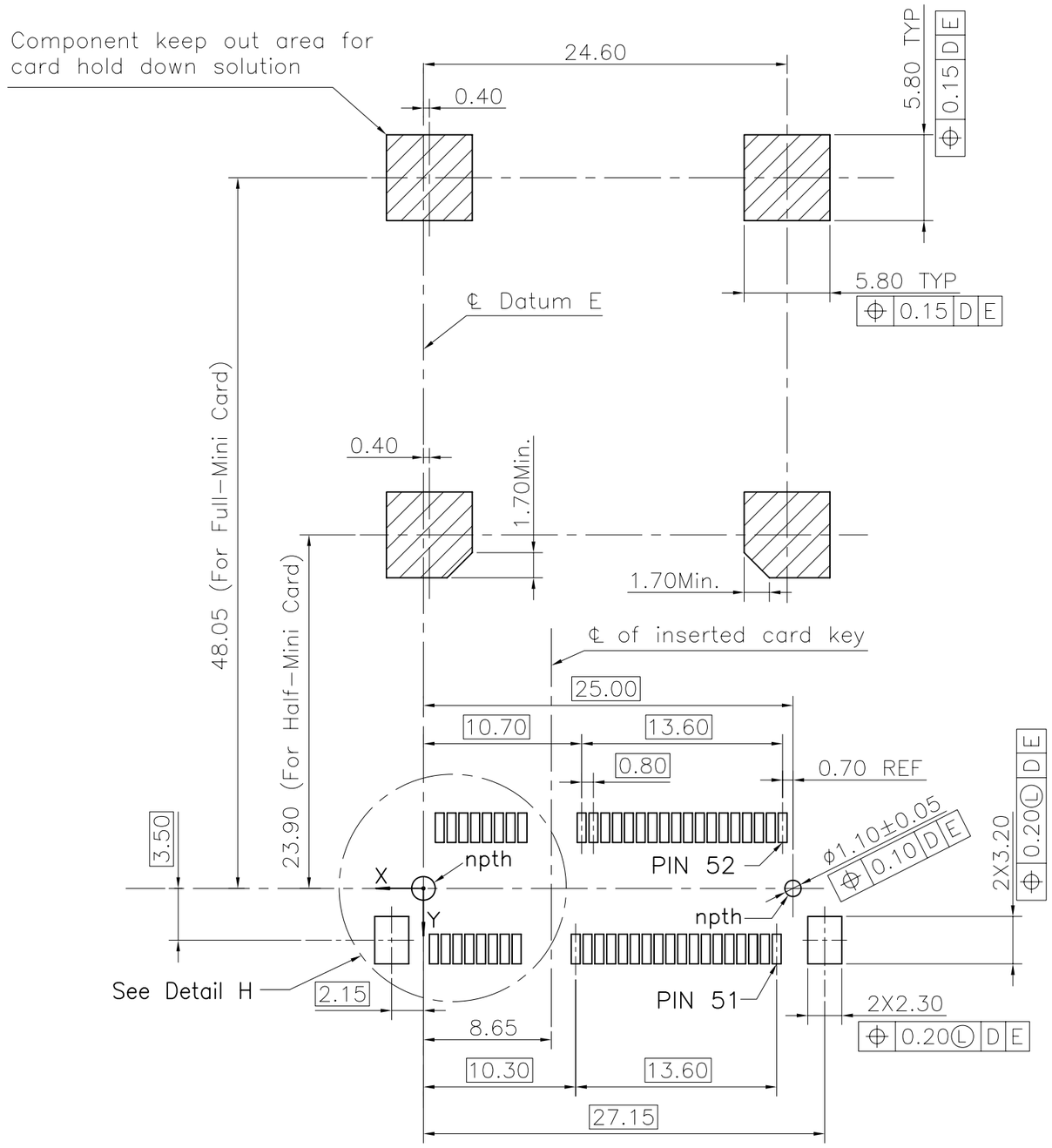

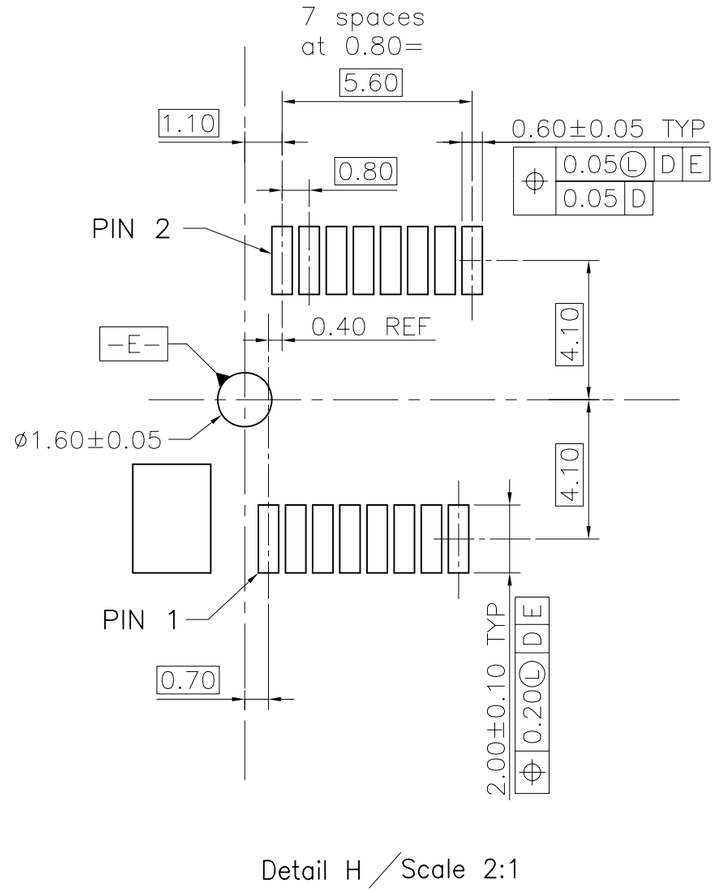

Detail H / Scale 2:1

1.DATUM D IS THE TOP SURFACE OF PCB
2.THE HORIZONTAL AXIS FOR THE PATTERN IS ESTABLISHED BY A LINE THROUGH THE CENTER OF THE ø1.60 AND ø1.10 HOLES.THE VERTICAL AXIS IS 90° TO THE HORIZONTAL AXIS, THROUGH THE CENTER OF DATUM E.
3.LOCATION OF INSERTED CARD EDGE IS ALIGNED WITH ℄ OF HOLES.

GENERAL TOLERANCES UNLESS SPECIFIED		PART NO. AAA-PCI-073-K02	LOTES
.X ± 0.35	X.° ± 3°		
.XX ± 0.25	.X° ± 2°	APPROVED BY Barney	TITLE MINI PCI EXPRESS 6.7H 0.8PITCH 52P
.XXX ±0.15	.XX° ±1°		
CUSTOMER DRAWING		CHECKED BY Vito	DWG NO. AP-AAA-PCI-073
SIZE A4	UNITS MM	DRAWN BY XU	SHEET 3 / 5 · SCALE 2 : 1 · REV 3

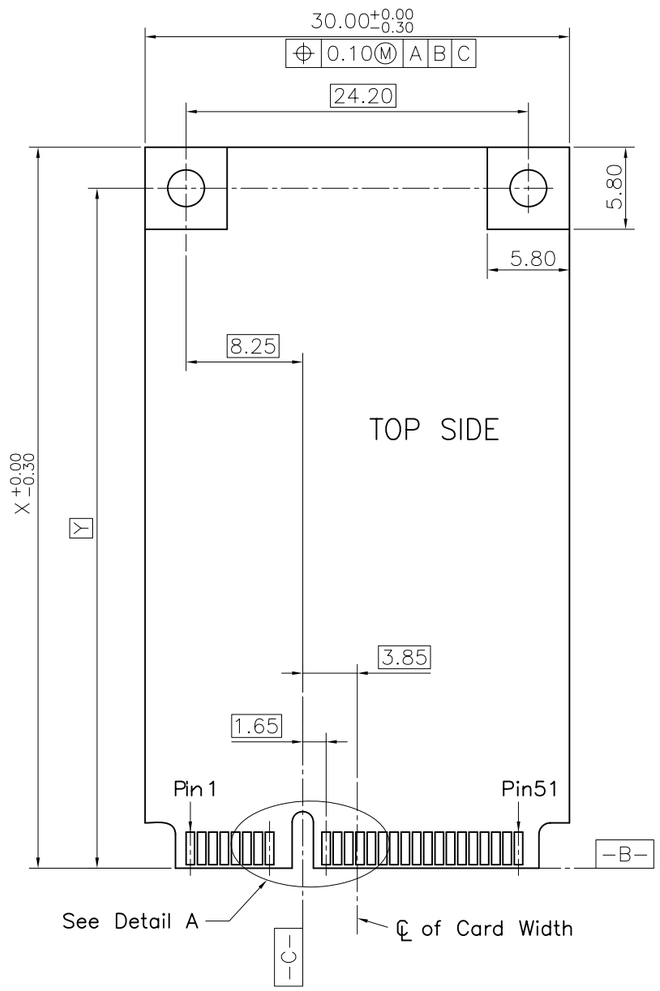

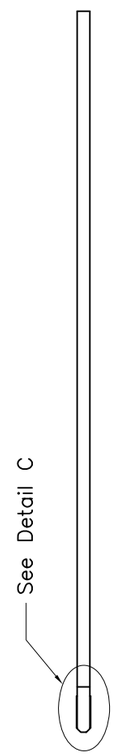

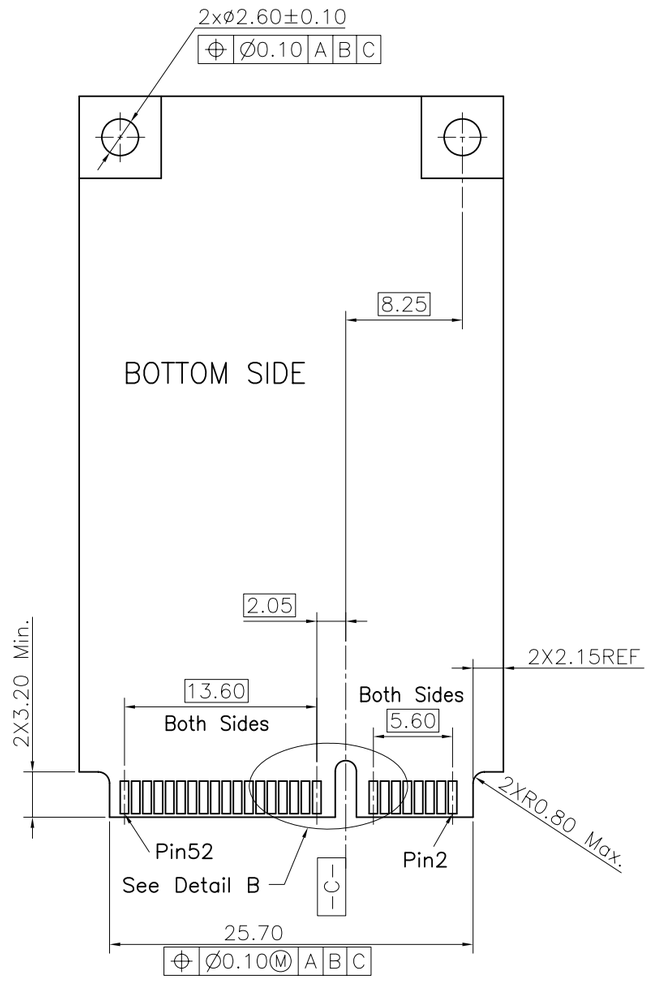

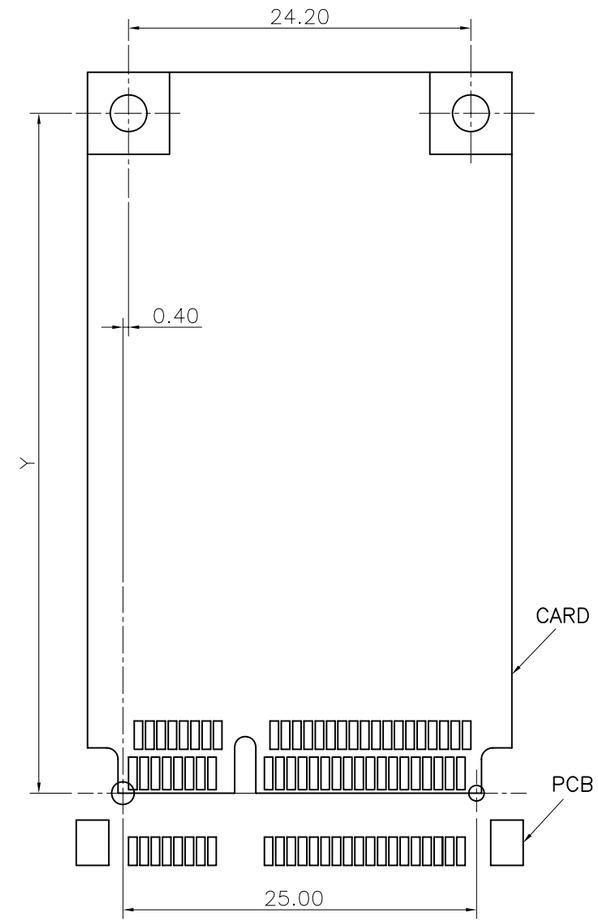

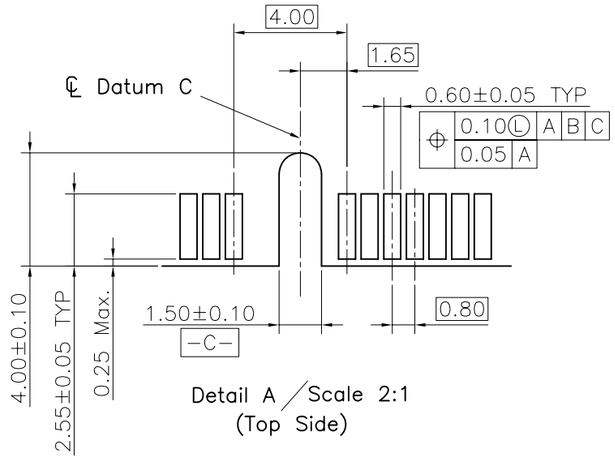

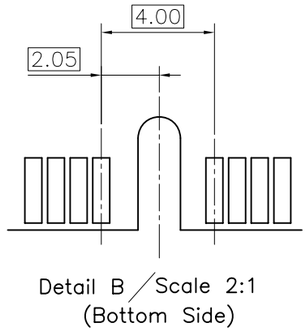

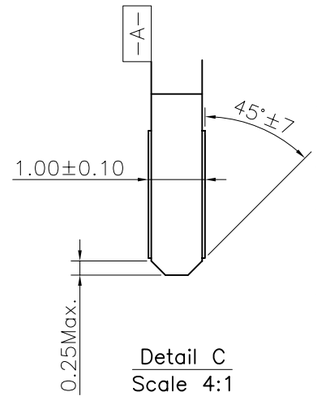

	DIM X	DIM Y
Half−Mini Card	26.80	23.90
Full−Mini Card	50.95	48.05

GENERAL TOLERANCES UNLESS SPECIFIED		PART NO. AAA-PCI-073-K02	LOTES
.X ± 0.35	X.° ± 3°		
.XX ± 0.25	.X° ± 2°	APPROVED BY Barney	TITLE MINI PCI EXPRESS 6.7H 0.8PITCH 52P
.XXX ± 0.15	.XX° ± 1°		
CUSTOMER DRAWING		CHECKED BY Vito	DWG NO. AP-AAA-PCI-073
SIZE A4	UNITS MM	DRAWN BY XU	SHEET 4 / 5 · SCALE 5 : 3 · REV 3

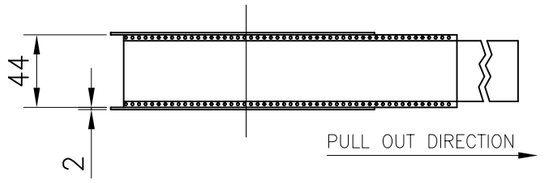

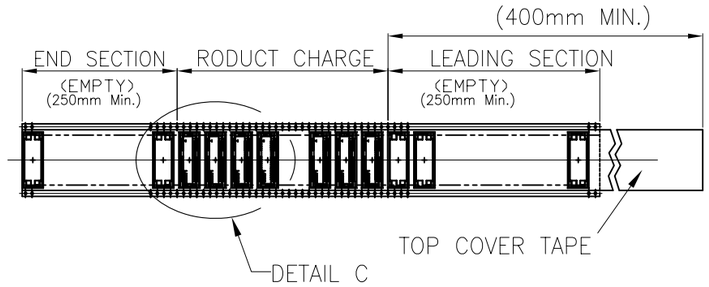

NOTES:
1. MATERIAL :
   1.1 CARRY TAPE: PS
   1.2 COVER TAPE: PET
   1.3 SHIPPING CARTON: CORRUGATED FIBER
2. DIMENSION :
   2.1 REEL: W=44.5, øA=330
   2.2 SHIPPING CARTON: L=335, W=335, H=320 (INNER)
3. QUANTITY :
   3.1 PRIMARY PACKING: 450 PCS/REEL
   3.2 SECONDARY PACKING: 6 REELS/CARTON(2700PCS)
4. PEELING RESISTANCE: 20gf~120gf.
5. PEELING SPEED: 300mm/minutes.

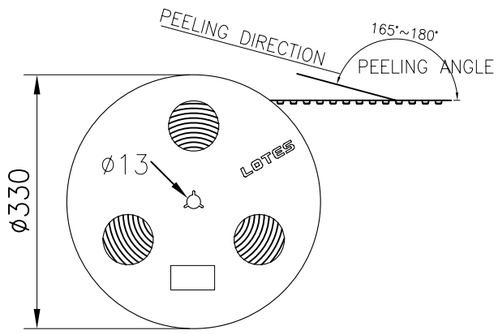

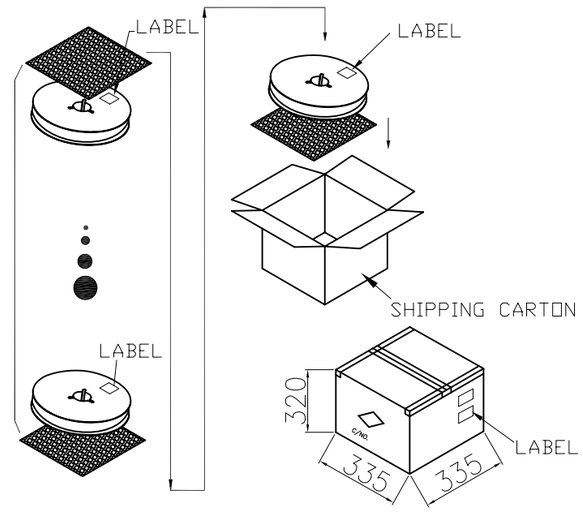

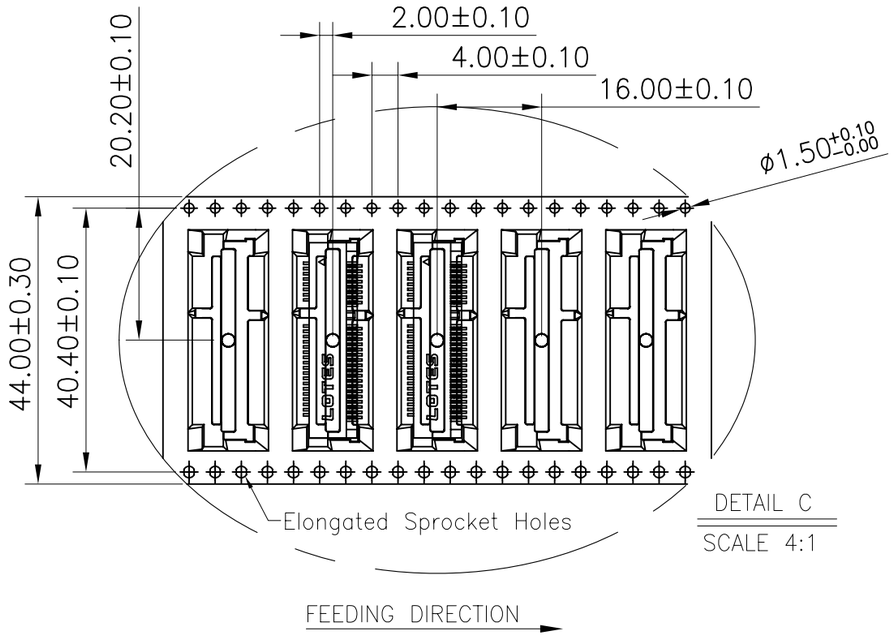

GENERAL TOLERANCES UNLESS SPECIFIED		PART NO. SEE TABLE	LOTES
.X ± 0.35	X.°± 3°		
.XX ± 0.25	.X°± 2°	APPROVED BY Barney	TITLE MINI PCI EXPRESS 6.7H 0.8PITCH 52P
.XXX ±0.15	.XX°±1°		
CUSTOMER DRAWING		CHECKED BY Vito	DWG NO. AP-AAA-PCI-073
SIZE A4	UNITS MM	DRAWN BY XU	SHEET 5 / 5 · SCALE N/A · REV 3