REV.	DESCRIPTION	CHANGED	ECN/NO.	DATE
A0	NEW ISSUE			2012/8/17

NOTE:
1.MATERIAL:
HOUSING:HIGH TEMPERATURE POLYESTER & GLASS FIBER UL94V-0 BLACK COLOR
CONTACT:COPPER ALLOY
SHELL:COPPER ALLOY
FINISH:
CONTACT: Au PLATING ON CONTACT AREA
SOLDERING AREA: TIN PLATING
SHELL: AU PLATING

DP F -- 20 S XX XX 06

- DP FEMALE
- PIN NUMBER:
- PROCESSING MODE: S:SMT D:DIPE
- SHELL PLATING: G:FRONT SHELL GOLD PLATING N:FRONT SHELL NICKEL PLATING
- PLATING CODE: A=1u" E=15u" F:30u"
- COLOR CODE: 01=WHITE 02=BLACK
- SERIAL NUMBER

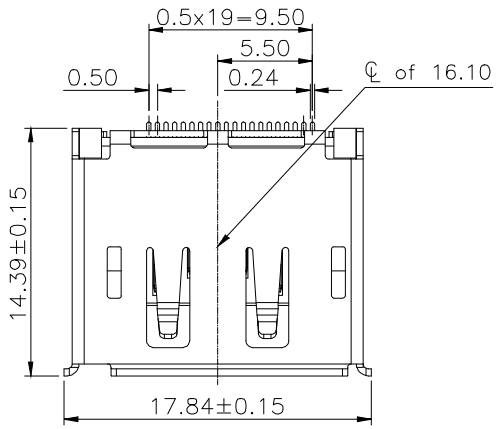

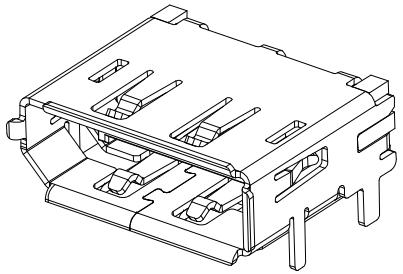

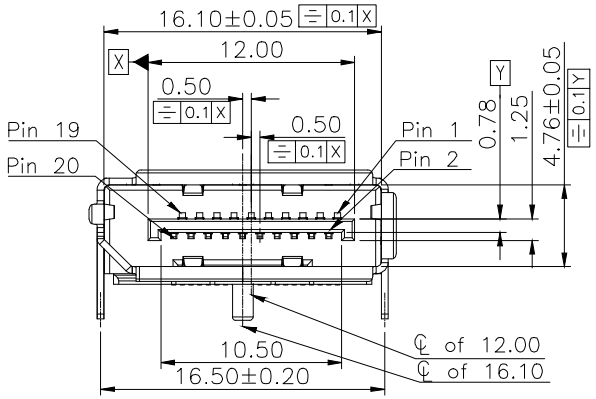

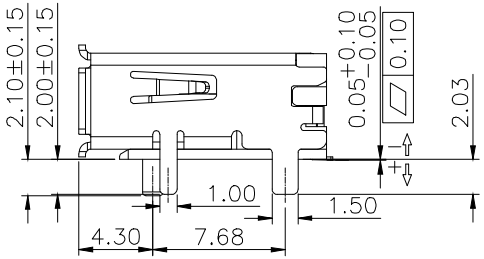

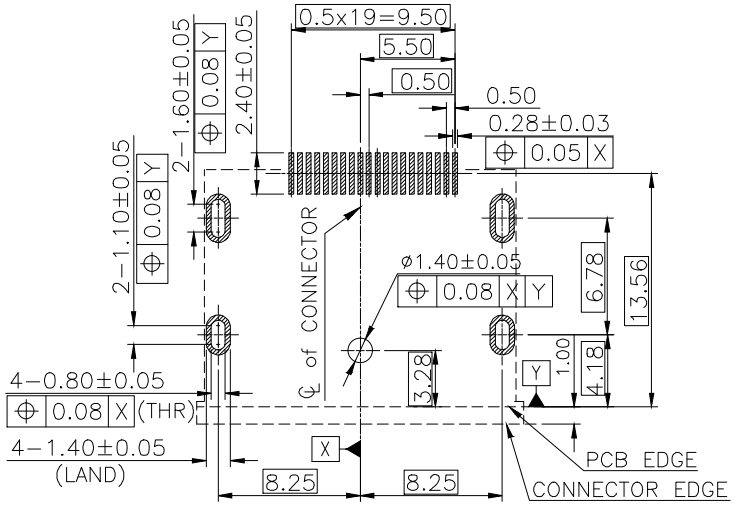

RECOMMENDED P.C.BOARD LAYOUT (TOP VIEW)
TOLERANCES UNLESS OTHERWISE SPEC.±0.05
Hole AREA KEEP OUT AREA

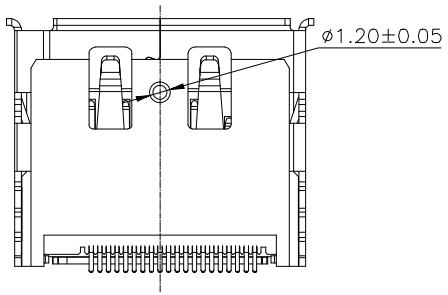

东莞昂瑞电子有限公司
DongGuan Dory Electronic CO., LTD.

公差参考表				产品名称	DISPLAY PORT 20P FEMALE SMT外壳插板				
X	±0.35	ANGLE		产品编号	DPF-20SXXXX05				
X.X	±0.25	X°	±2°	模具图号	1252120024XX0401	版 本	A0	单 位	MM
X.XX	±0.15	X.X°	±1.0°	审 核		单 重		比 例	
X.XXX	±0.050	X.XX°	±0.50°	制 图	傲启盛	类 型		页 数	1/1